EUREKA

Upright Vacuum Cleaner

Household Type

Owner's Guide

7700-7900 Series

Index

Important Safeguards 2
Service Information 4
Thermal Cut Off 4
Use 5
Dirt Alert Feature 6
Accessories 7-8
Brush Roll 9
Brush Roll Belt 9
Dust Bag 10-11
Light Bulb 11
Problem Solving 12
Customer Order Form 13
Warranty 15

IMPORTANT

Do not return this product to the store.

For assembly problems or questions contact: Eureka's Customer Service Division toll free at 1-800-282-2886*, 7 a.m. to 8 p.m., Central Standard Time, Monday through Saturday.

For replacement of broken or missing items to be shipped direct to you, call 1-800-438-7352*, 8 a.m. to 4:45 p.m., Central Standard Time, Monday through Friday.

*En Mexico llame al 5670-6169.

www.eureka.com

IMPORTANT SAFEGUARDS

When using an electrical appliance, basic precautions should always be followed, including the following:

READ ALL INSTRUCTIONS BEFORE USING THIS VACUUM CLEANER.

WARNING

To reduce the risk of fire, electric shock, or injury:

- Do not use outdoors or on wet surfaces.
- **Do not leave vacuum cleaner when plugged in.** Turn off the switch and unplug the electrical cord when not in use and before servicing.
- Do not allow to be used as a toy. Close attention is necessary when used by or near children.
- Use only as described in this manual. Use only manufacturer’s recommended attachments.
- Do not use with damaged cord or plug. If vacuum cleaner is not working as it should, has been dropped, damaged, left outdoors, or dropped into water, return it to a service center before using.
- Do not pull or carry by cord, use cord as a handle, close a door on cord, or pull cord around sharp edges or corners. Do not run vacuum cleaner over cord. Keep cord away from heated surfaces.
- Do not use extension cords or outlets with inadequate current carrying capacity.
- Turn off all controls before unplugging.
- Do not unplug by pulling on cord. To unplug, grasp the plug, not the cord.
- Do not handle plug or vacuum cleaner with wet hands.
- Do not put any object into openings. Do not use with any opening blocked; keep free of dust, lint, hair, and anything that may reduce airflow.
- This vacuum cleaner creates suction and contains a revolving brush roll. Keep hair, loose clothing, fingers, and all parts of body away from openings and moving parts.
- Do not place cleaner on furniture or stairs as the brush roll may cause damage. Place cleaner on floor with the handle in storage position while using attachments.
- Do not pick up anything that is burning or smoking, such as cigarettes, matches, or hot ashes.
- Do not use without dust bag in place.
- Belt pulleys can become hot during normal use. To prevent burns, avoid touching the belt pulley when servicing the drive belt.
- Use extra care when cleaning on stairs.
- Do not use to pick up flammable or combustible liquids such as gasoline, or use in areas where they may be present.
- Unplug your cleaner and store indoors in a cool, dry area.
- Keep your work area well lighted.
- Unplug electrical appliances before vacuuming them.

SAVE THESE INSTRUCTIONS

CONSEILS DE SÉCURITÉ

Lors de l'utilisation d'un appareil électrique, quelques précautions élémentaires doivent être observées, incluant les suivantes:

LISEZ TOUTES LES INSTRUCTIONS AVANT D'UTILISER VOTRE ASPIRATEUR.

AVERTISSEMENT

Pour réduire le risque de feu, de choc électrique, ou de blessure:

- Ne pas utiliser à l'extérieur ou sur des surfaces mouillées.
- **Fermez le commutateur et débranchez l'appareil lorsque vous ne l'utilisez pas ou avant le nettoyage ou l'entretien.**
- Ne permettez pas qu'il soit utilisé comme jouet. Une attention particulière est nécessaire lorsque utilisé par ou prés d'un enfant.
- Suivez les recommandations d'utilisation de ce manuel. Utilisez uniquement les accessoires recommandés par le fabriquant.
- Ne pas utiliser si le cordon ou la fiche sont endommagés. Si l'aspirateur ne fonctionne pas comme il le devrait, s'il a été échappé, s'il est endommagé, s'il a été laissé à l'extérieur ou échappé dans l'eau, retournez-le à un centre de service avant d'utiliser.
- Ne pas le tirer ou le transporter par le cordon, ne pas utiliser le cordon en guise de poignée. Ne pas fermer une porte sur le cordon ou tirer le cordon sur des coins ou bordures pointus. Ne pas circuler sur le cordon avec l'aspirateur. Tenir le cordon à distance des surfaces chauffantes.
- Ne pas utiliser des rallonges ou des prises qui n'ont pas de capacité suffisante pour transporter le courant.
- Fermer tous les contrôles avant de débrancher.
- Ne pas débrancher en tirant sur le cordon. Pour débrancher, tenez la fiche et non le cordon.
- Ne pas manipuler la fiche ou l'aspirateur avec les mains mouillées.
- Ne pas rien insérer dans les ouvertures. Ne pas utiliser si des ouvertures sont bloquées; assurez-vous qu'elles soient dégagées de poussière, mousse, cheveux ou toute autre chose qui pourrait réduire le passage de l'air.
- Cet aspirateur crée de la succion et contient un rouleau-brosse tournant. Tenir les parties mobiles et les ouvertures loin des cheveux, du linge, des doigts et de toute partie du corps.
- Ne pas mettre l'aspirateur sur les meubles ou sur les escaliers car le rouleau-brosse peut faire des dommages. Placer l'aspirateur sur le plancher avec le manche en entreposage position temps que les accessoires sont en usage.
- Ne pas ramasser des objets qui brûlent ou fument comme les cigarettes, allumettes ou cendres chaudes.
- N'utilisez pas sans le sac de poussière en place.
- Les poulies du courroie peuvent devenir chaudes pendant l'utilisation normale. Pour prévenir des brûlures, évitez de touché la poulie du courroie lorsque vous réparez la courroie.
- Portez une attention particulière lorsque vous nettoyez les escaliers.
- Ne pas utiliser pour ramasser des liquides inflammables ou combustibles comme de l'essence: Ne pas utiliser dans les endroits où ces liquides pourraient être présents.
- Débrancher l'aspirateur et entreposer à l'intérieur dans un endroit propre et sec.
- Maintenez un bon éclairage à l'endroit où vous travaillez.
- Débrancher les appareils électrique avant de les balayer.

CONSERVEZ CES INSTRUCTIONS

To reduce the risk of electric shock, this appliance has a polarized plug (one blade wider than the other). This plug will fit in a polarized outlet only one way. If the plug does not fit fully in the outlet, reverse the plug. If it still does not fit, contact a qualified electrician to install the proper outlet. Do not change the plug in any way.

Afin de réduire le risque de choc électrique, cet appareil est muni d'une fiche polarisée (une des lames est plus large). Cette fiche ne peut être insérée dans une prise polarisée que d'une seule façon. Si la fiche ne peut être insérée dans la prise, retourner la fiche. Si la fiche ne peut toujours pas être insérée dans la prise, faire installer une prise adéquate par un électricien qualifié. Ne pas modifier la fiche.

GENERAL INFORMATION

The cleaner is designed to pick up dirt and dust particles. Avoid picking up hard or sharp objects with the cleaner to prevent bag tears, hose clogs, and fan blade breakage with subsequent motor damage.

Service Information

The instructions in this booklet serve as a guide to routine maintenance. For additional service information telephone our toll free number for the nearest Eureka Authorized Warranty Station. **You should know the model, type and serial numbers when you call:**

USA: 1-800-282-2886
Mexico: 5670-6169
Canada: 1-800-282-2886

If you prefer, you can write to The Eureka Company, Service Division, 807 North Main Street, Bloomington, Illinois 61701, USA. In Canada write to The Eureka Company, 866 Langs Drive, Cambridge, Ontario N3H 2N7. Refer to The Eureka Limited Warranty for complete service information.

DO NOT OIL the motor or the brush roll at any time. The bearings are permanently lubricated and sealed.

Rating Plate

The model, type, and serial numbers are indicated on the rating plate located on the back of the cleaner. For prompt and complete service information, always refer to these numbers when inquiring about service.

Model & Type_____

Serial No. _____

MODEL	TYPE	SERIAL NO.
VOLTS	AMPS.	HERTZ
	SERVICE INFORMATION:	1-800-282-2886
	THE EUREKA COMPANY	
	BLOOMINGTON, ILLINOIS 61701	

Thermal Cut Off

This vacuum cleaner has a special thermostat that protects the cleaner from further damage in case of serious motor overheating. If the cleaner suddenly shuts off, unplug the unit, discontinue use, and take it to a Eureka Authorized Service Center for repair.

NOTE: The thermostat will reset after the motor cools off.

HOW TO USE

CAUTION: Moving parts, make sure on/off switch is in off position before plugging in. NEVER LEAVE PLUGGED IN CLEANER UNATTENDED.

An upright vacuum cleaner will clean any type of carpet. Use the attachments to clean upholstery or bare floors. **When using attachment tools, place the handle in the upright position. Do not place cleaner on furniture or steps as the brush roll may cause damage.**

INSTRUCTIONS FOR 7700 SERIES

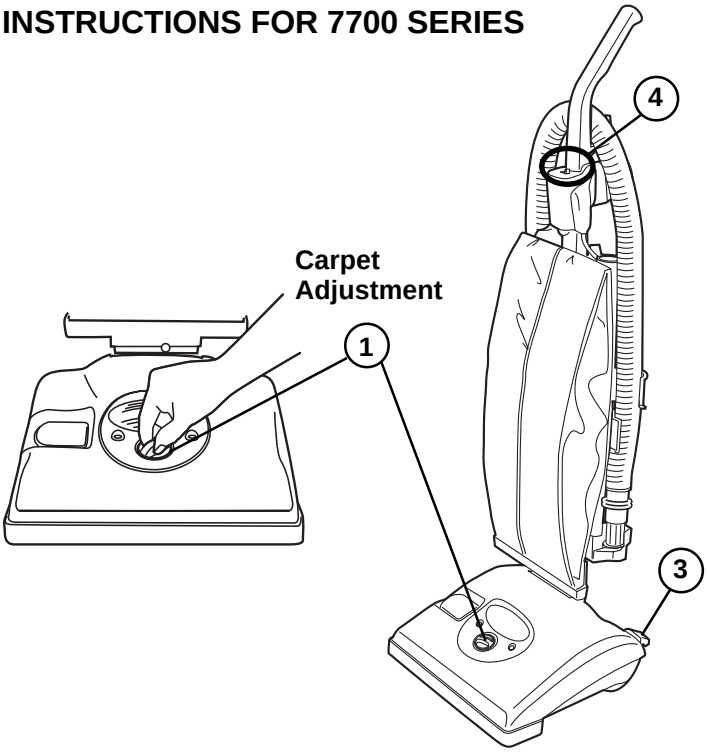

1. Adjust cleaner height setting to lowest position for maximum cleaning. See section below.
2. Plug electrical cord into outlet.
3. Step on handle release. Pull handle back to a comfortable position. There are three positions: store, operate and clean under.
4. On handle, push On (-) or Off (O) power switch.

INSTRUCTIONS FOR 7900 SERIES

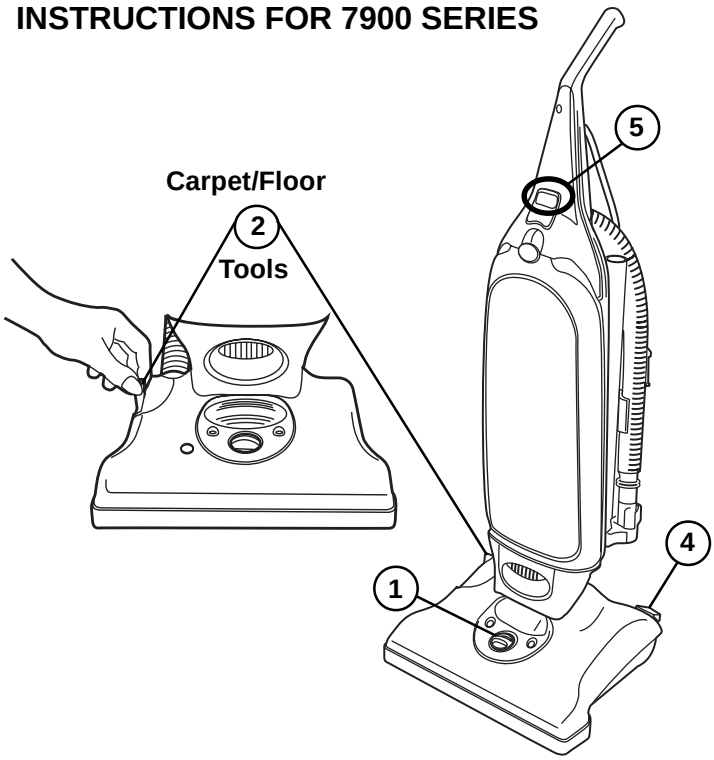

1. Adjust cleaner height setting to lowest position for maximum cleaning. See section below.
2. Push selector to Carpet/Floor cleaning.
3. Plug electrical cord into outlet.
4. Step on handle release. Pull handle back to a comfortable position. There are three positions: store, operate and clean under.
5. On handle, push On (-) or Off (O) power switch. Some models have three positions: On, ESP (See page 6) and Off.

Cleaner Height Setting

WARNING: Avoid injury. Keep loose clothing, hair, fingers, and all other parts of body away from any moving part (such as the revolving brush). Turn off the switch and unplug the cleaner before changing the cleaner height setting.

The front of the cleaner has an adjustment that raises or lowers the cleaner base to match the type of carpet. With the cleaner cord unplugged, and the cleaner handle in the “operate” position, set the adjustment to lowest setting for maximum cleaning. Adjust to a higher setting to make pushing easier and to provide longer belt life. The brush roll must reach the carpet for effective cleaning.

For ease in moving adjustment knob, tilt the cleaner back to remove weight from front wheels.

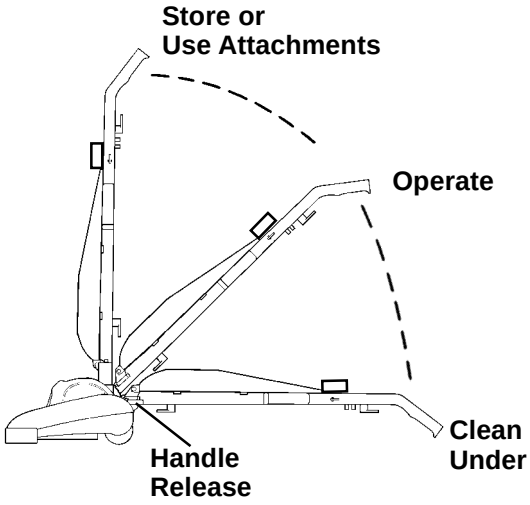

Dirt Alert Feature (On some models)

The dirt alert sensor uses infra-red technology to indicate whether or not floors are clean. When debris breaks the light beam, the red light comes on indicating additional cleaning is needed in this area. If there is no break in the light beam, the floor is clean and no red light will come on.

When using your new vacuum you may be cleaning deep down hidden dirt missed by your old vacuum causing the light to stay red longer. With frequent cleaning, after the first few times you use your new Eureka vacuum, the red light should go on less.

NOTE: The dirt alert feature is not intended to be used for above the floor cleaning with attachments.

If the red light stays on continuously, you can quickly check to see if the dirt sensor is working properly. Tip the vacuum backwards on rear wheels, lifting the brush roll off the carpet a couple of inches, after a few seconds the light should turn off. If it does not, then turn the vacuum off, unplug it and continue on to the next section of checking the dirt sensor for light beam interruption.

HINT: IF THE RED LIGHT WILL NOT GO OFF, turn off the vacuum, unplug and check for debris in the dirt channel which may be blocking the sensor beam.

Or, the dirt sensor may be dirty. See the next section to clean the emitter/sensor lenses.

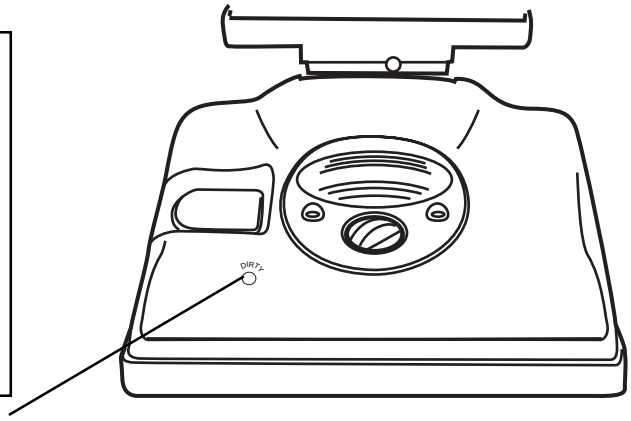

The **red** light indicates dirt, dust, etc. is still being removed from the area being cleaned.

How to Check the Dirt Alert Sensor for Interruption in Light Beam

There is an emitter and sensor lens located in each side of the dirt channel in the bottom of the base unit. In order to operate efficiently, the lens will need to be wiped off with a damp cloth followed by a dry cloth periodically.

NOTE: Turn off the switch and unplug the electrical cord before removing base plate on the base unit.

1. Turn the cleaner over. Pull up firmly to remove base plate.
2. Wipe off emitter and sensor lenses with a damp cloth followed by a dry cloth. They are located at the bottom of the side walls in the dirt channel. Check the brush roll for any threads, hairs, etc. and remove.
3. Slant front of base plate to catch tabs into cleaner slots. Push down above each hook to snap base plate back into place.

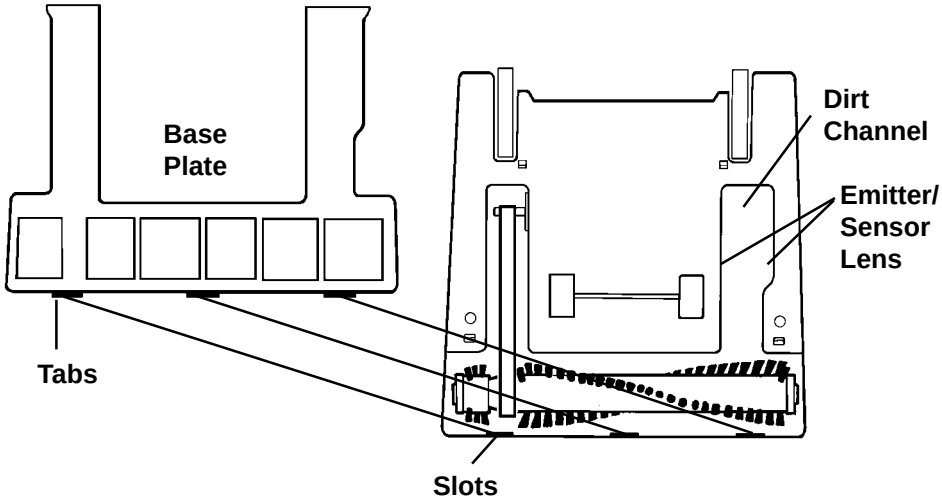

ESP - Extra Suction Power (On some models)

The ESP feature provides two settings for cleaning power. Position one setting should be used for normal floor cleaning. Position two setting should be used when using attachments or for cleaning high traffic areas.

A three position switch in the handle (offered on some models) will indicate if your cleaner offers this ESP feature.

Attachment Cleaning

Note: The revolving brush roll does not stop turning when using the attachment tools. Place the handle in the upright position. Do not place cleaner on furniture or steps as the brush roll may cause damage.

Attachment Door *(7700 Series only)*

The attachment door allows a quick conversion from floor to attachment tool cleaning. The quick connect hose has a notch in the converter that diverts the air suction from the brush roll area to the hose and attachments.

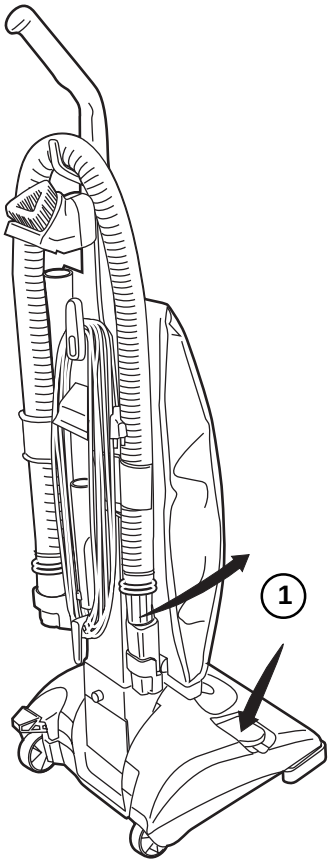

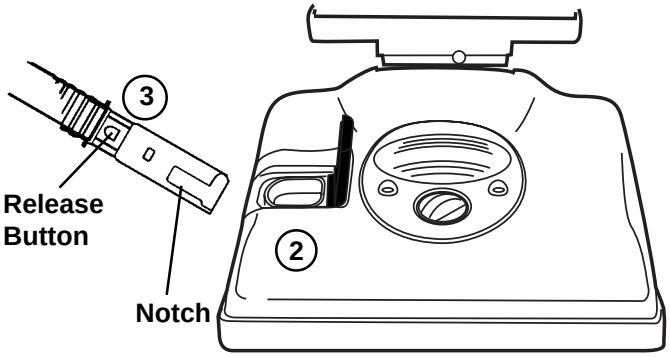

1. Remove quick connect hose.
2. Open and hold the attachment door.
3. Push hose converter into attachment door (be sure notch in the converter is toward back of cleaner).

To remove converter, push button on back of converter and lift to remove. Replace hose on the back of cleaner.

Carpet/Floor or Tools Selector *(7900 Series)*

The Carpet/Floor or Tools Selector allows instant conversion from floor to attachment tool cleaning.

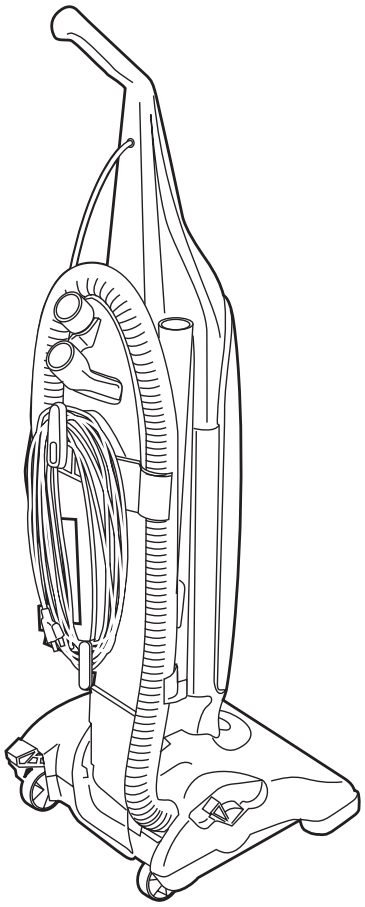

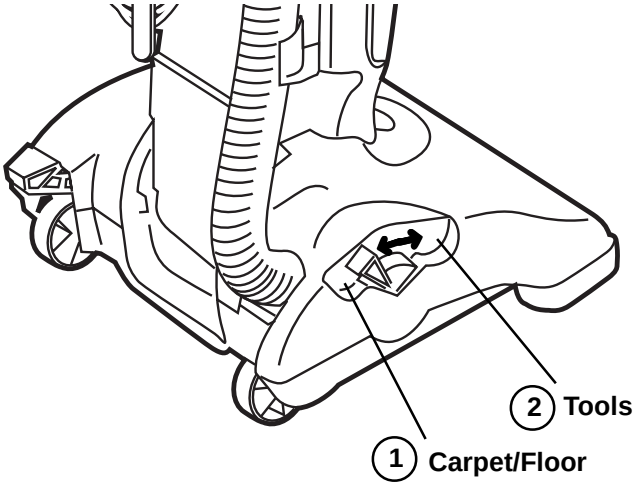

1. **Cleaning Carpet/Floor:** Push selector switch back. This directs the suction to the floor.
2. **Cleaning with Tools:** Push selector switch forward. This directs the suction to the hose and tools.

How To Use Attachments

NOTE: Do not place cleaner on furniture or steps as the brush roll may cause damage. Place cleaner on floor with the handle in storage position while using attachments.

Depending on the model of vacuum cleaner you have purchased, you will have a combination of the below tools.

Put attachment onto wand. Twist to secure.

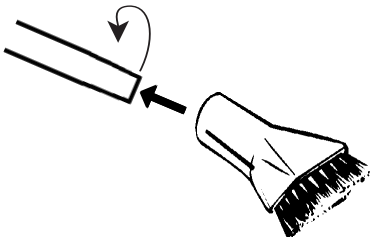

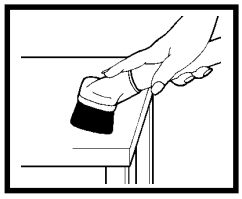

Dusting brush is for furniture, blinds, books, lamp shades, shelves. (On some models.)

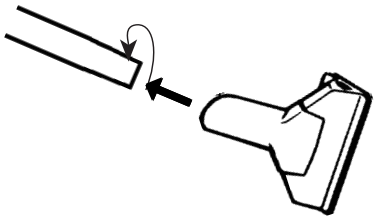

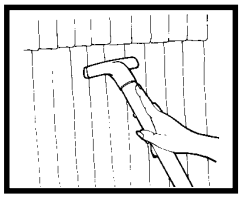

Upholstery nozzle is for curtains, draperies, cushions, fabrics. (On some models.)

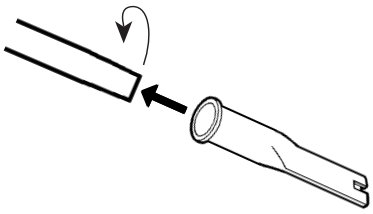

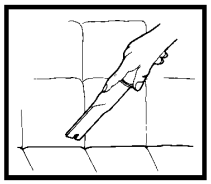

Crevice tool cleans corners, baseboards, between cushions.

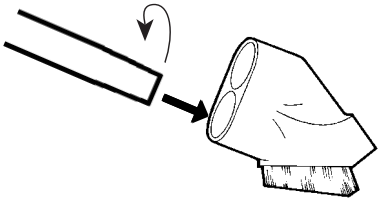

Dusting Side

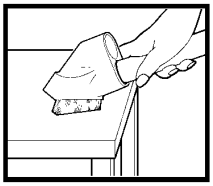

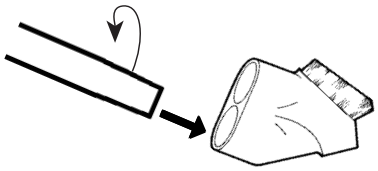

Upholstery Side

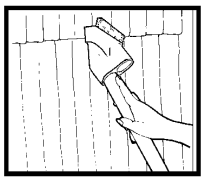

Combination tool gives two types of cleaning tools:

- Use brush side to dust furniture, blinds, books, lamps, shelves.
- Use upholstery side for curtains, draperies, cushions, fabrics.

Extension wands for added reach

HOW TO MAINTAIN

The instructions in this booklet serve as a guide to routine maintenance. To avoid unnecessary service calls, check the bag, belt, and brush roll often.

Brush Roll

The brush roll turns to brush and sweep the carpet. Periodically remove hair and threads from the brush roll so it can continue to brush the carpet. To maintain the most efficient cleaning, the bristles must touch the carpet. To test the bristle length, hold a ruler against the underneath side of the cleaner. If the bristles no longer touch the ruler, replace the brush roll.

Brush Roll Belt

The brush roll belt turns the brush roll as the bristles sweep and brush the carpet. Check the belt regularly to be sure it is in good condition. Replace the belt if it stretches, cracks or loses tension. Cut away any hair or threads wound around the brush roll or the belt pulley because the buildup could cause the belt to rotate unevenly.

How to Replace Brush Roll Belt

NOTE: Turn off the switch and unplug the electrical cord before replacing belt. Belt pulleys can become hot during normal use. To prevent injury, avoid touching the motor pulley when checking the belt.

CAUTION: Improper installation of the brush roll could cause carpet or cleaner damage.

1. Turn the cleaner over. Pull up firmly to remove bottom plate.
2. Lift out brush roll and remove belt from motor pulley, discard old belt.
3. Slide new belt around the motor pulley.
4. Place belt around pulley end of brush roll.
5. Pull left end of brush roll down to stretch belt. Align the end cap with the base and push down to secure.
6. Align and push down right end cap to secure.
7. Turn the brush roll by hand until the belt centers onto the brush roll pulley.
8. Slant front of bottom plate to catch tabs into cleaner slots. Push down until each hook snaps into place.

Use GENUINE EUREKA replacement belt, 54312.

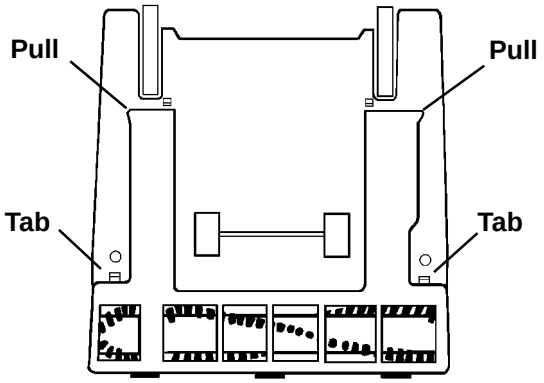

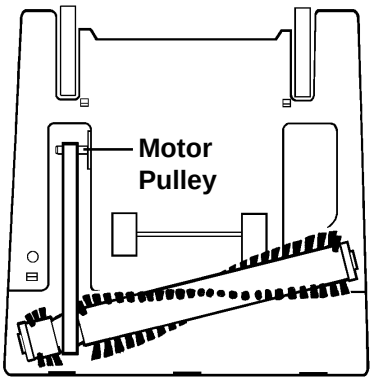

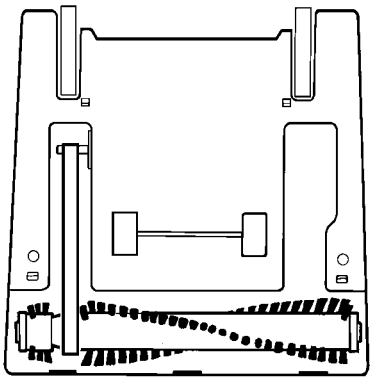

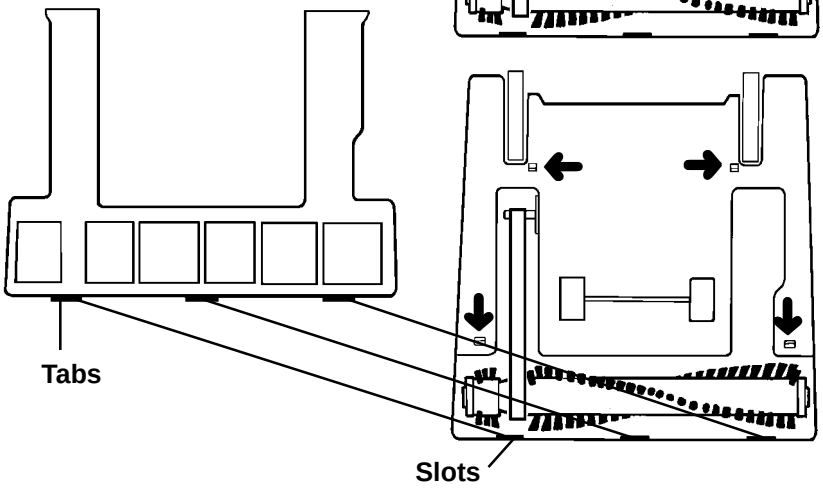

Look for the GENUINE EUREKA PRODUCT **symbol.**

For location of nearest Eureka Warranty Station or Service information call **1-800-282-2886.**

Disposable Dust Bags

The disposable dust bag plays a very important role in the efficiency of a vacuum cleaner. The purpose of the paper bag is to trap dirt. As the bag traps dirt, it must also be porous enough to allow air to pass on through. If the paper bag becomes clogged, no air can pass through the cleaner and no cleaning can take place regardless of how powerful the unit. Change the dust bag frequently. Some fine particles can restrict airflow very quickly and will decrease performance even before the bag appears to be full.

When vacuuming carpet fresheners or cleaners, powder, plaster dust, or similar fine substances, the bag may require more frequent changes.

Be sure to use GENUINE EUREKA bags for best performance. If a clean dust bag does not restore maximum performance, check for obstructions in the hose or airflow passage.

How To Change Dust Bag – Style U

NOTE: Turn off the switch and unplug the electrical cord before changing dust bag. Never operate the vacuum cleaner without the dust bag.

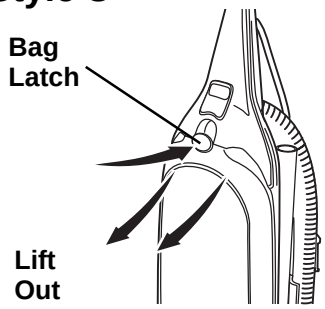

Hard Case Model

1. Remove the bag cover by pushing up on bag latch and lifting cover out and away from the unit.
2. Fold top of paper bag down. Grasp bag collar to remove dirty bag from bag inlet. Discard bag.
3. Hold new dust bag collar facing the bag inlet.
4. Secure lower portion of bag collar behind the tabs.
5. Push bag collar over bag inlet.
6. Snap onto the two pins at the top.
7. Tuck top and bottom of paper bag into the dust bag compartment.
8. Replace bag cover by putting tabs on bag cover into the slots on the unit, then push bag cover up until bag latch clicks into place.

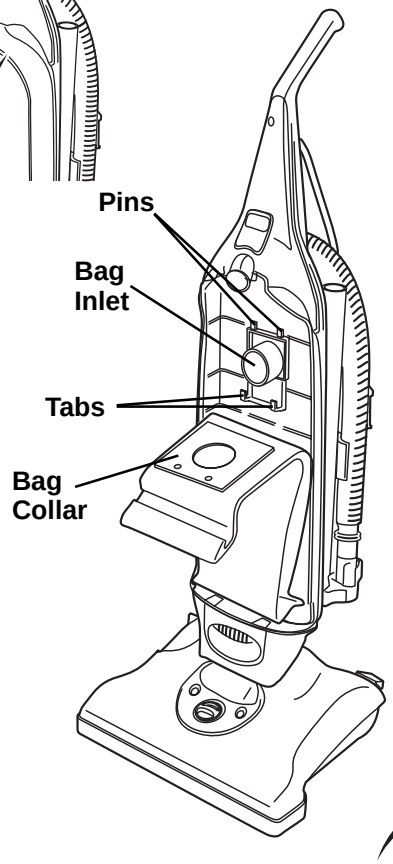

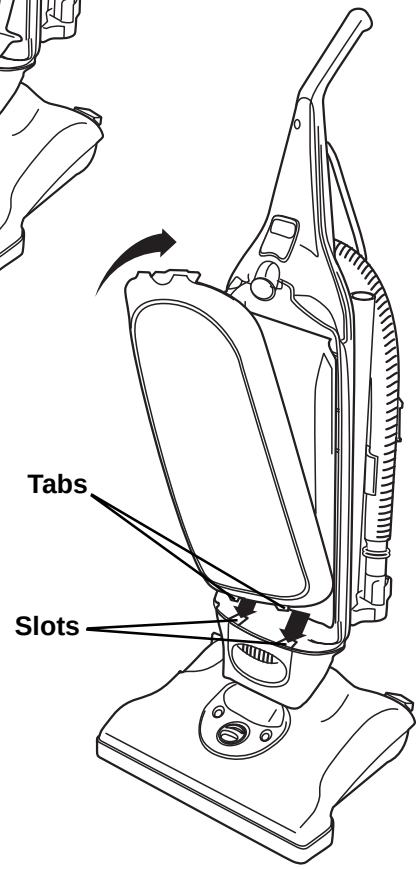

Soft Bag Model

1. Unzip the bag.
2. Fold top of paper bag down. Grasp bag collar to remove dirty bag from bag inlet. Discard bag.
3. Hold new dust bag collar facing the bag inlet.
4. Secure lower portion of bag collar behind the tabs.
5. Push bag collar over bag inlet.
6. Snap onto the two pins at the top.
7. Tuck top and bottom of paper bag into the soft outer bag.
8. Close the zipper or zippers.

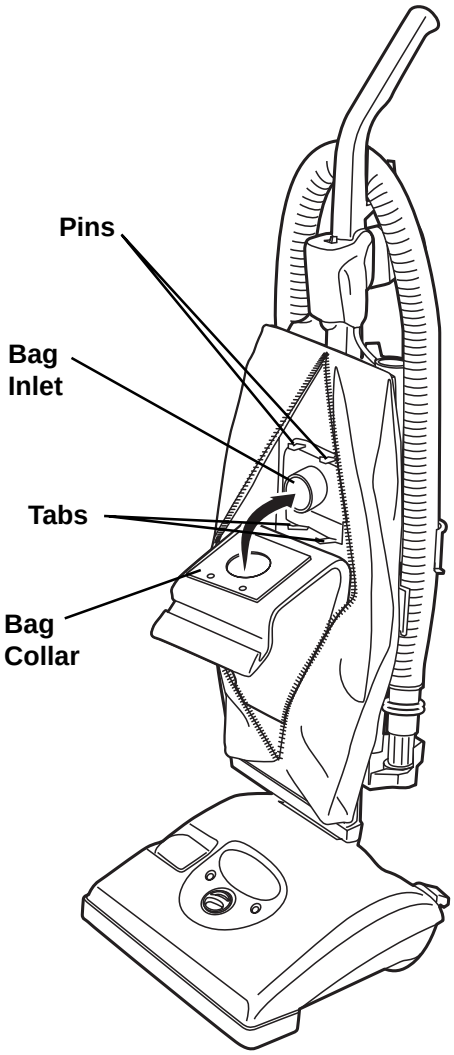

Ask for GENUINE EUREKA dust bags – Style U.

Look for the GENUINE EUREKA PRODUCT symbol.

FILTERAIRE® Disposable Dust Bag (optional)

Our high filtration bag is a two-layer, disposable bag that combines our standard paper bag with a non-woven air filter inside. Use a Filteraire dust bag to create a cleaner indoor environment because the bag filters better than our standard bag. The bags are available from your local dealer, or you can call 1-800-282-2886 for other locations.

How To Replace Light Bulb

NOTE: Turn off the switch and unplug the electrical cord before changing light bulb.

1. Remove two screws from the top of lens. Remove lens to access light bulb.
2. Pull out light bulb; push new bulb into place. **Use GENUINE EUREKA bulb, No. 57940-2.**
3. Install headlight lens to proper position on hood. Secure with the two screws.

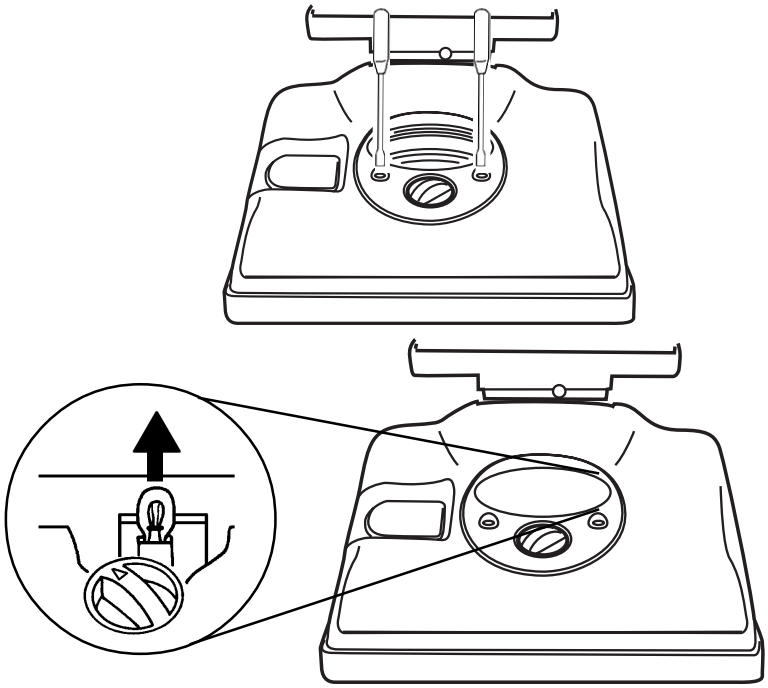

PROBLEM SOLVING

NOTE: Turn off the switch and unplug the electrical cord before servicing.

PROBLEM	CAUSE	SOLUTION
Motor will not start.	☑ Electric Plug	☐ Push plug securely into outlet. ☐ Try another outlet. ☐ Check circuit breaker.
Does not clean the carpet or floor.	☑ Disposable Dust Bag ☑ Belt ☑ Brush Roll ☑ Hose ☑ Carpet/Floor or Tools Selector *(7900 Series only)*	☐ Change the bag. Hint: If picking up fine dust, the bag may not look full but a fine substance tends to reduce suction when it blocks the airflow through the paper bag. ☐ Replace a cut, loose or out of shape belt. ☐ Clean hair and thread from bristles and end cap area. Replace brush roll if bristles are worn. ☐ Remove any clogs from the hose that restrict the airflow. ☐ Push selector switch back. This directs the suction to the carpet or floor.
No suction at the end of the hose.	☑ Hose Converter *(7700 Series only)* ☑ Carpet/Floor or Tools Selector *(7900 Series only)* ☑ Disposable Dust Bag ☑ Hose ☑ Attachment Door or Hose Connection on Base	☐ Hose converter has to seat inside the attachment door. Hint: Place converter notch to the back of the cleaner. ☐ Push selector switch forward. This directs the suction to the hose and tools. ☐ Change the bag. Hint: If picking up fine dust, the bag may not look full, but a fine substance tends to reduce suction when it blocks the airflow through the paper bag. ☐ Remove any clogs from the hose that restrict the airflow. Check both ends of the hose. ☐ Remove bottom plate and clean debris from the attachment door area or around the hose connection.
Motor suddenly stops.	☑ Thermal Cut Off	☐ Refer to page 4.
Headlight not working.	☑ Light Bulb	☐ Replace light bulb.
Noise from the brush roll area.	☑ Brush Roll ☑ Belt	☐ Remove bottom plate and clean debris from the brush roll area. ☐ Replace a cut, loose or out of shape belt.
Cleaner is hard to push.	☑ Cleaner Height Setting ☑ Belt	☐ Turn adjustment knob to a higher position. Hint: Put handle in operating position. Tilt the cleaner back to raise the front wheels off floor. Then turn the knob. ☐ Replace a cut, loose and out of shape belt.
Brush roll will not turn.	☑ Belt	☐ Replace cut, loose or out of shape belt.
Burning smell.	☑ Belt	☐ Replace cut, loose or out of shape belt.
Cleaning height knob will not turn.	☑ Cleaner Height Setting	☐ Hint: Put handle in operating position. Tilt the cleaner back to raise the front wheels off floor. Then turn the knob.
Missing parts.		☐ Call 1-800-438-7352 between 8 a.m. and 4:45 p.m. central standard time, Monday-Friday. Know the model and serial number when you call.
Questions?		☐ Call 1-800-282-2886 7 a.m. to 8 p.m. Monday through Saturday. Know the model and serial number when you call.

EUREKA
VACUUM CLEANERS

The Eureka Company
P.O. Box 2799
Bloomington, IL 61702-2799

2/01

ORDER FORM

(Not applicable in Canada)

SOLD TO			
Name			
Address (street address needed for UPS)			
City	State	Zip	
Telephone (Day)	(Eve)	(Fax)	

SHIP TO			
Name			
Address (street address needed for UPS)			
City	State	Zip	
Telephone (Day)	(Eve)	(Fax)	

IMPORTANT:
Be sure to include your model, type, and serial numbers. These numbers may be found on the rating plate.

Model Number: _____

Type: _____

Serial Number: _____

To Order

By Phone
1-800-438-7352*
HOURS:
Call between 8 a.m. and 4:45 p.m., central standard time Monday through Friday.

By FAX
1-309-823-5789

To Answer Problems or Questions for U.S.A. and Canada call:
1-800-282-2886*
7 a.m. to 8 p.m. central standard time Monday through Saturday.

*En Mexico llame al
5670-6169

By Mail

Simply fill out this Order Form. Please be sure to include day and evening phone numbers.

www.eureka.com

	Part No.	Qty.	Price (USD)	Total
Genuine Eureka Bags and Belts				
Disposable Bags (style U), package of 3	54310A		3.49	
Disposable Bags (style U), package of 10	54918		9.99	
Filteraire Disposable Bags (style U), pkg of 3	57802A		5.99	
Belt (style U) - Extended Life, package of 2	61120		2.99	
Accessories/Tools				
Extension Wand	14070-3		4.09	
Dusting Brush	54505-3		5.19	
Upholstery Nozzle	38284-3		3.29	
Combination Tool	61037		4.49	
Crevice Tool	26708-119N		2.69	
Floor Brush	54785A		10.39	
Micro Tool Set for Keyboards	54002		12.99	
Hoses				
Stretch Hose (approx. 51 inch reach)	60954-1		8.59	
Stretch Hose (approx. 35 inch reach)	60954-2		7.99	
Stretch Hose (approx. 80 inch reach)	60954-3		8.99	
Brush Rolls				
Brush Roll, 12 inch	60858-1		14.19	
Brush Roll, 15 inch	60244-1		12.09	
Miscellaneous Parts				
Light Bulb	57940-2		.99	

Total (prices subject to change without notice)	
Tax (add state tax & local taxes as required by law)	
Postage & Handling Charge (within U.S.A.)	**$5.50**
TOTAL	
TOTAL ENCLOSED	

Method of payment (No C.O.D. Orders)

☐ **Check or money order** (payable to **The Eureka Company**). Do not send currency.

☐ **Charge to my** ☐ **Visa** (13/15 digits) ☐ **MasterCard** (13 digits) ☐ **Amer. Express** (15 digits)

Acct. number _____ Expiration Date _____

Signature (full name as shown on acct.) _____

70350

©2001 White Consolidated Industries, Inc.
Printed in U.S.A.

THE EUREKA LIMITED WARRANTY

What This Warranty Covers

Your Eureka cleaner is warranted to be free from all defects in material and workmanship in normal household use for a period of one year. The warranty is granted only to the original purchaser and members of his or her immediate household. The warranty is subject to the following provisions.

What This Warranty Does Not Cover

- Parts of the cleaner that require replacement under normal use, such as disposable dust bags, filters, drive belts, light bulbs, and brush roll bristles
- Damages or malfunctions caused by negligence, abuse, or use not in accordance with the Owner's Guide.
- Defects or damages caused by unauthorized service or the use of other than Genuine Eureka parts.

What The Eureka Company Will Do

The Eureka Company will, at its option, repair or replace a defective cleaner or cleaner part that is covered by this warranty. As a matter of warranty policy, the Eureka Company will not refund the consumer's purchase price.

Warranty Registration

Please fill out and return the warranty registration card accompanying your cleaner.

Obtaining Warranty Service

To obtain warranty service you must return the defective cleaner or cleaner part along with proof of purchase to any Eureka Authorized Warranty Station.
You will find the nearest location in the Yellow Pages, under "Vacuum Cleaners–Service and Repair." Be certain that the Warranty Station is "Eureka Authorized."

For the location of the nearest Eureka Authorized Warranty Station or for service information, telephone toll free:

USA: 1-800-282-2886
Mexico: 5670-6169
Canada: 1-800-282-2886

If you prefer, you can write to The Eureka Company, Service Division, 807 North Main Street, Bloomington, Illinois 61701, USA. In Canada write to The Eureka Company, 866 Langs Drive, Cambridge, Ontario N3H 2N7.

If it is necessary to ship the cleaner outside your community to obtain warranty repair, you must pay the shipping charges to the Eureka Authorized Warranty Station. Return shipping charges will be paid by the Warranty Station. When returning parts for repair, please include the model, type, and serial number from the data plate on the cleaner.

Further Limitations and Exclusions

Any warranty that may be implied in connection with your purchase or use of the cleaner, including any warranty of Merchantability or any warranty for Fitness For A Particular Purpose is limited to the duration of this warranty. Some states do not allow limitations on how long an implied warranty lasts, so the above limitations may not apply to you.

Your relief for the breach of this warranty is limited to the relief expressly provided above. In no event shall Eureka be liable for any consequential or incidental damages you may incur in connection with your purchase or use of the cleaner. Some states do not allow the exclusion or limitation of incidental or consequential damages, so the above limitation or exclusion may not apply to you.

This warranty gives you specific legal rights. You may also have other rights which vary by state.

GENUINE
EUREKA PRODUCT

Questions & Answers about Genuine Eureka Products

Q: Why should I use only Genuine Eureka paper bags, belts, and parts in my Eureka vacuum cleaner?
A: Using Genuine Eureka Products, which are made to our exacting specifications and engineered with emphasis on quality, performance, and customer satisfaction, ensures the long life and cleaning efficiency of your vacuum cleaner. Overall, this saves you money and helps to keep your home clean.

Q: How can I be sure I am using only genuine Eureka products in my vacuum cleaner?
A: Typically, packaged products and paper bags can be identified by a "Genuine Eureka Product" symbol (see illustration above). For further identification assistance, you may call our toll-free number, 1-800-282-2886, for the location of a nearby Eureka Authorized Warranty Station.

Q: Are there any differences between "made to fit" or "imitation" and Genuine Eureka paper bags, belts, and parts?
A: Yes, there are some very important differences in materials, quality, and reliability. Many customers have mistakenly purchased "imitation" paper bags and parts while thinking they purchased genuine. Unfortunately, many of these customers discovered the differences after they experienced related difficulties.

For Genuine Eureka Value, Accept No Imitations!
THE EUREKA COMPANY
Bloomington, Illinois 61701

Household Warranty
abs 190

Questions?
Do Not Return To Store
Call
1-800-282-2886

7 a.m. to 8 p.m., Central Standard Time, Monday thru Saturday

Accessories for 7700 Series

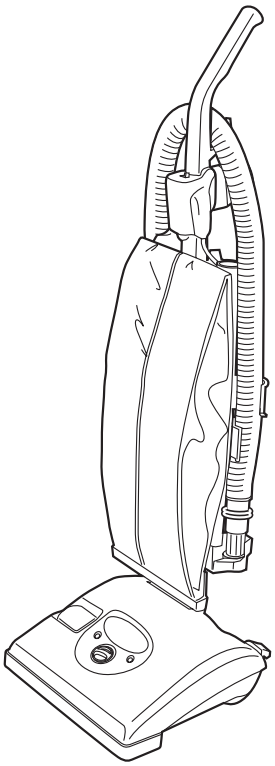

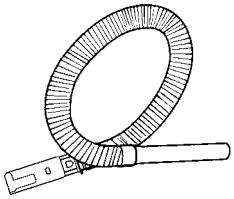

Hose

1 combination tool

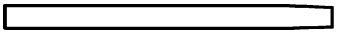

1 wand

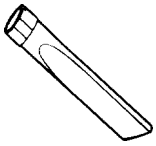

1 crevice tool

Accessories for 7900 Series

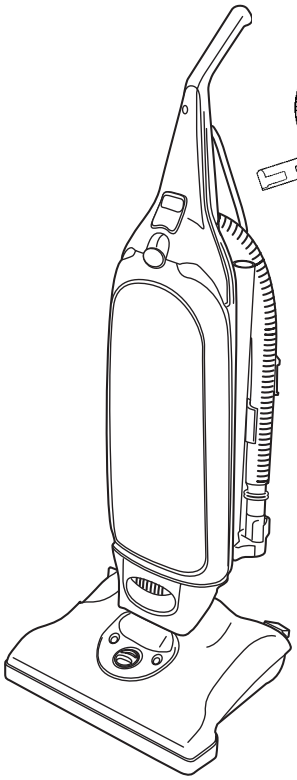

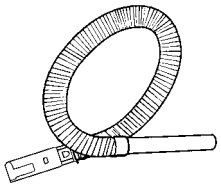

Hose

1 dusting brush

1 upholstery tool

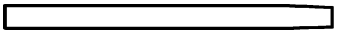

1 wand

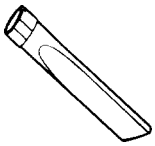

1 crevice tool

Thank you for selecting a Eureka cleaner.

Don’t Forget to Use Genuine Eureka Bags and Belts

Caution: Damages caused by the use of non-genuine Eureka bags are not covered by the Eureka Limited Warranty.

©2000 White Consolidated Industries, Inc.

Printed in U.S.A.

Part No. 70924 (1/01)